American Standard

Eco

Wall Hung Urinal
VF-0414

FEATURE

-
- Easy to Clean
- Overflow hole

SPECIFICATIONS

- Flush Valve Drillings: Single
- Basin Dimensions: W275xL290xH403mm.
- Material : Vitreous China

COLOR AVAILABILITY

- White (WT)

INCLUDED COMPONENTS

- Adapter for Urinal
- Installation manual
- Hanger for Urinal

SHIPPING WEIGHT

- Net Weight: 7 KG
- Gross Weight: 9 KG

STANDARDS CRITERIA

- TIS Standard
- EN Standard
- ASME Standards

DIMENSIONAL DRAWING

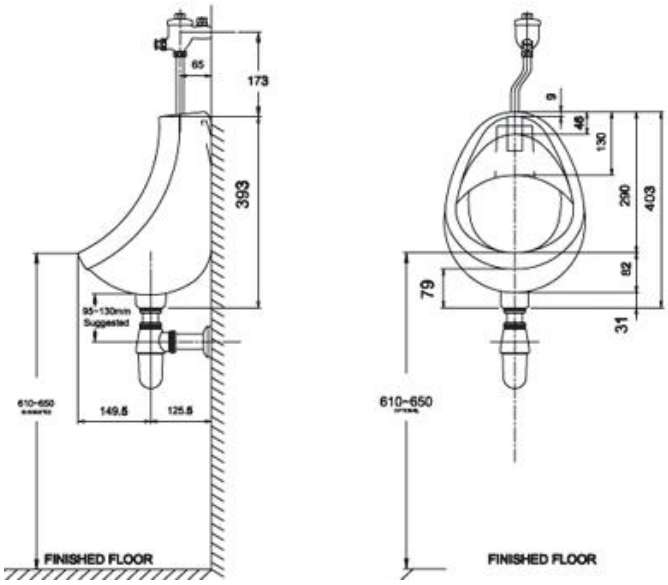

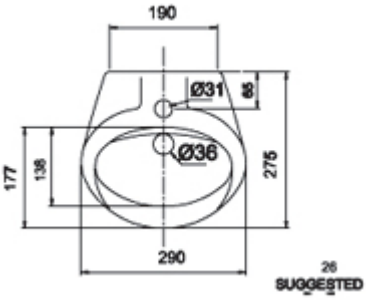

This document is the property of American Standard. It can neither be reproduced, nor communicated, without authorization.
American Standard reserves the right to change dimensions and specifications without notice, we assume no liability for the use of obsolete dimensions.