Milano Vessel
CCASF650

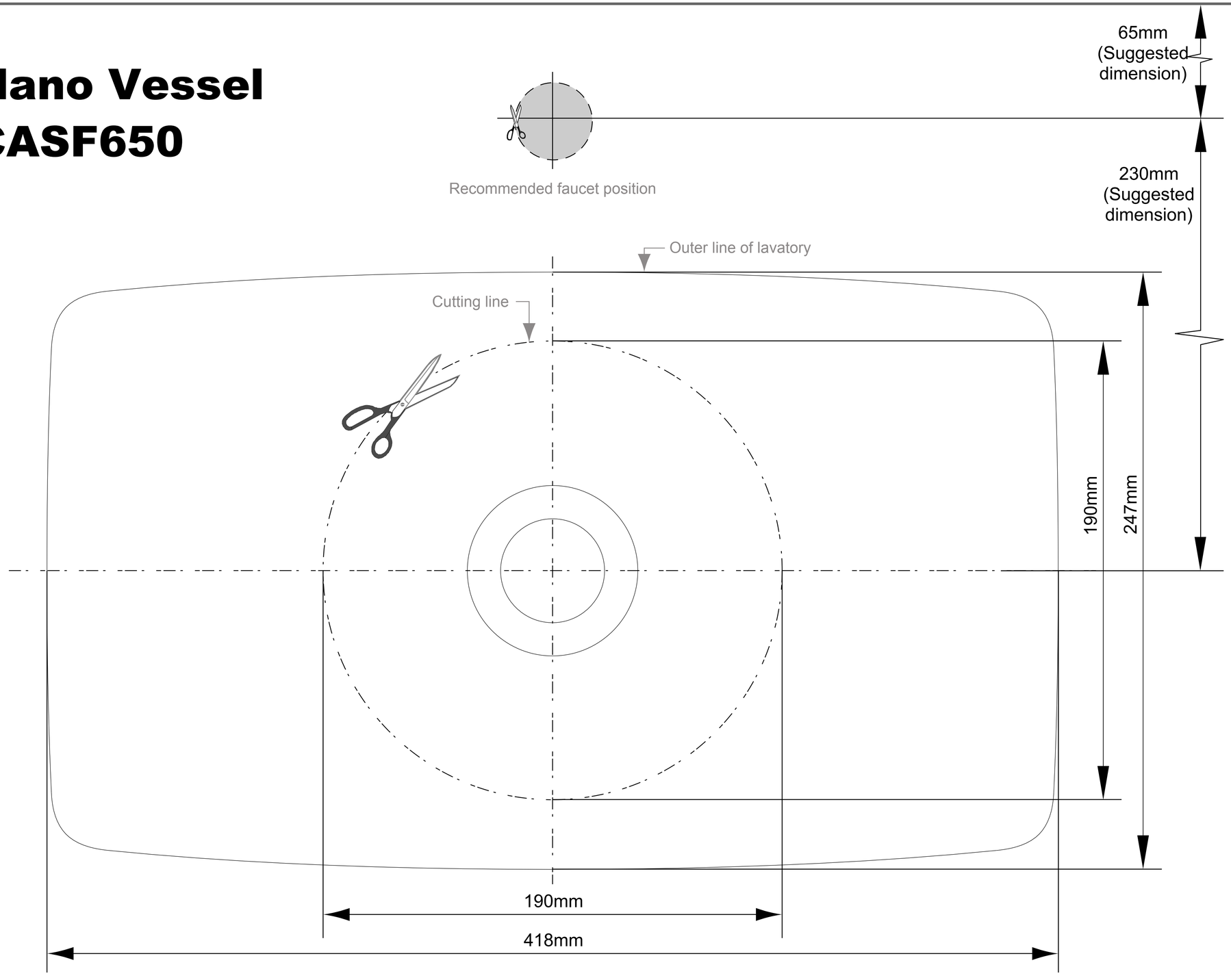

INSTALLATION
Template

Remark: The installation instruction is supplied for export products only!

AMERICAN STANDARD LIMITED WARRANTY

If inspection of these AMERICAN STANDARD products, within one year warranty after purchasing, confirms that its defective under normal use in material or workmanship, AMERICAN STANDARD will repair or, at its option exchange the product of a similar model.

The warranty does not cover the following:

1. None any documentary evidenced to show the period of warranty such as receipt, warranty card, etc.
2. Consequential or incidental damges.
3. Defects or damages arising from shipping, installation, altemation, accidents, misuse or lack of proper maintenance.
4. Postage or shipping costs included in retuening products for repair or replacement under this warranty and any labor or other costs of removal or installation of products under this warranty.
5. A product discontinuous.

Note: This template is for reference only, check actual dimensions of piece for correct measurement.

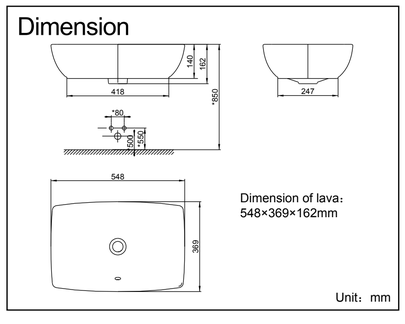

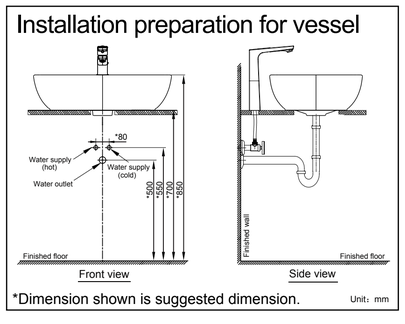

Finished wall

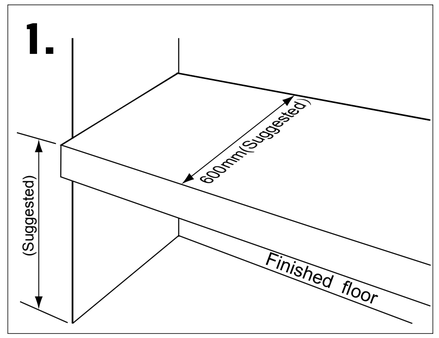

1. Preparation of the area for installation. (Suggested)

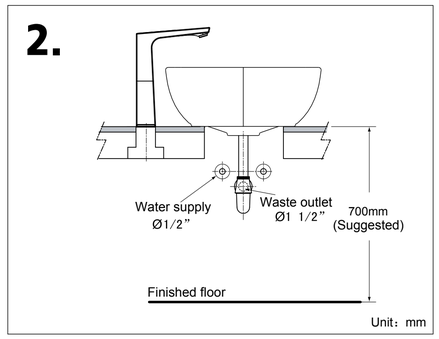

2. The distance for water supply, waste water outlet installation.

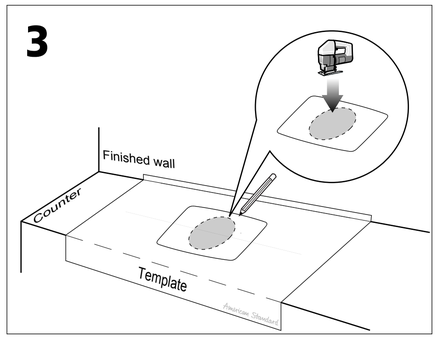

3. The template placing on the counter with position required, following lining by punching.

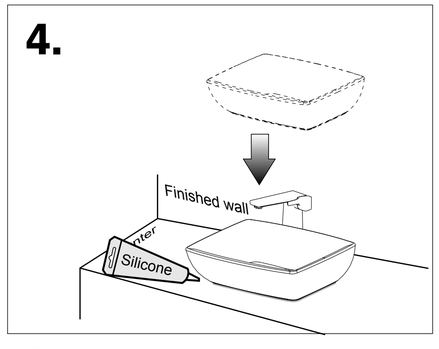

4. Basin taking and follow on position require. To install water supply & waste water outlet set and pop up waste together with basin, proper checking after finish installed, on & off water supply checking, water drainage, water leakage. If no short coming to apply the sealing material with basin's rim. (Sealing material is not provided.)

American Standard