Signature

American Standard

Counter top basin
CCAS0420

FEATURES

- **Design**: Modern thin edge design
- **Overflow**: with overflow

SPECIFICATIONS

- **Overall Dimensions**:
  L551xW429xH165mm
- **Basin Dimensions**:
  L551xW429x60mm(side edge)
- **Material**: VC

OPTIONS

- CCAS0420-1010410C0
- CCAS0420-1080410C0, , 8 inch 3 hole

SHIPPING WEIGHT AND DIMENSIONS

- Product gross weight: 16KG
- Product net weight: 14KG

STANDARDS CRITERIA

- China GB6952-2015

DIMENSIONAL DRAWING

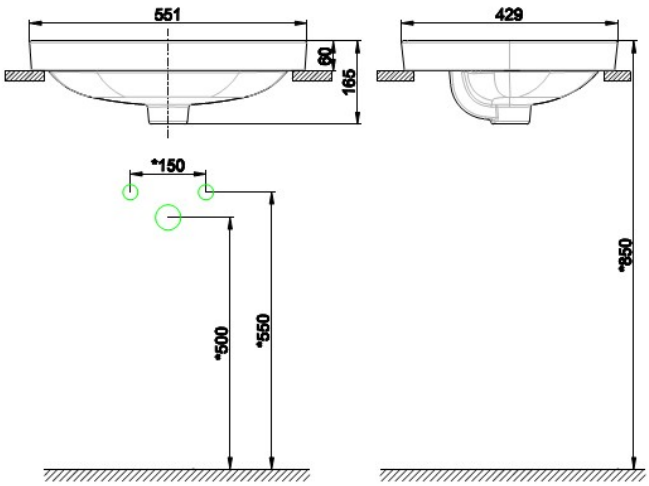

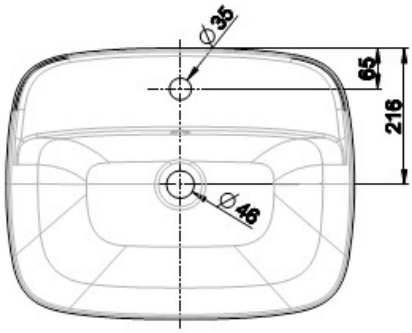

This document is the property of American Standard. It can neither be reproduced, nor communicated, without authorization.
American Standard reserves the right to change dimensions and specifications without notice, we assume no liability for the use of obsolete dimensions.