American Standard

Milano

Concealed Bath & Shower Mixer

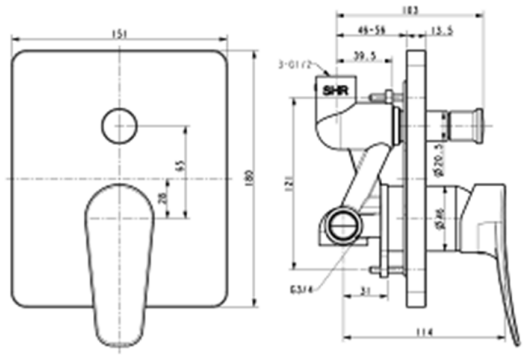

STANDARD SPECIFICATION

- Chromium plating for durable finish
- German ceramic disc cartridge
- Strong brass construction
- In-wall installation
- Flow rate @ 0.1 MPa (without spout) 12.6 L/min
- Flow rate @ 0.1 MPa (without shower) 13.38 L/min

PRODUCT WEIGHT: 2.03 **Kg**

APPLICABLE CODES & STANDARDS:

- TIS 2067-2552
- GB 18145-2014